CALCULATED
CHECKED

LEGEND

1. ITEM 441 - 1¼" Asphalt Concrete Surface Course, Type 1, (448), PG64-22
2. ITEM 441 - 1¾" Asphalt Concrete Intermediate Course, Type 2, (448)
3. ITEM 254 - Pavement Planing, Asphalt Concrete (See Note "A")
4. ITEM 441 - 0" Min. Asphalt Concrete Intermediate Course, Type 1, (448) (See Note "C")
5. ITEM 301 - 5" Asphalt Concrete Base, PG64-22
6. ITEM 301 - 6" Asphalt Concrete Base, PG64-22
7. ITEM 304 - 6" Aggregate Base
8. ITEM 407 - Tack Coat
9. Not Used
10. ITEM 605 - 6" Shallow Pipe Underdrains
11. ITEM 608 - 4" Concrete Walk
12. ITEM 609 - Combination Curb and Gutter, Type 2
13. ITEM 659 - Seeding and Mulching
14. ITEM 660 - Sodding Unstaked
15. ITEM 204 - Subgrade Compaction
16. ITEM 606 - Guardrail, Type MGS

- (A) 5"± Asphalt Concrete
- (B) 5"± Waterbound Macadam
- (C) 4"± Asphalt Concrete
- (D) 6"± Dense Asphalt Macadam Base

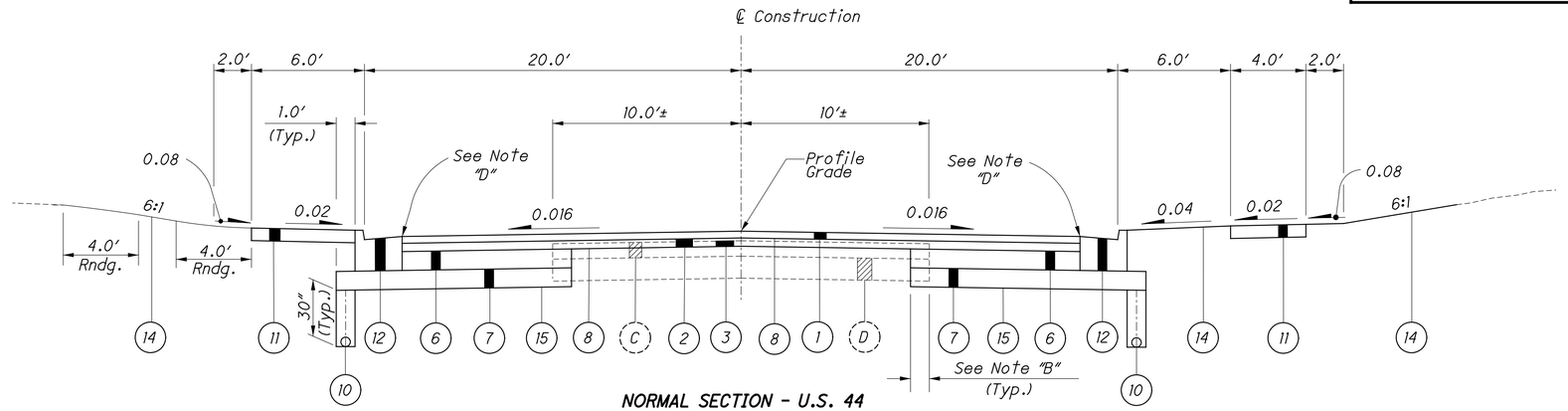

NORMAL SECTION - U.S. 44

STA. 300+00 TO STA. 318+50

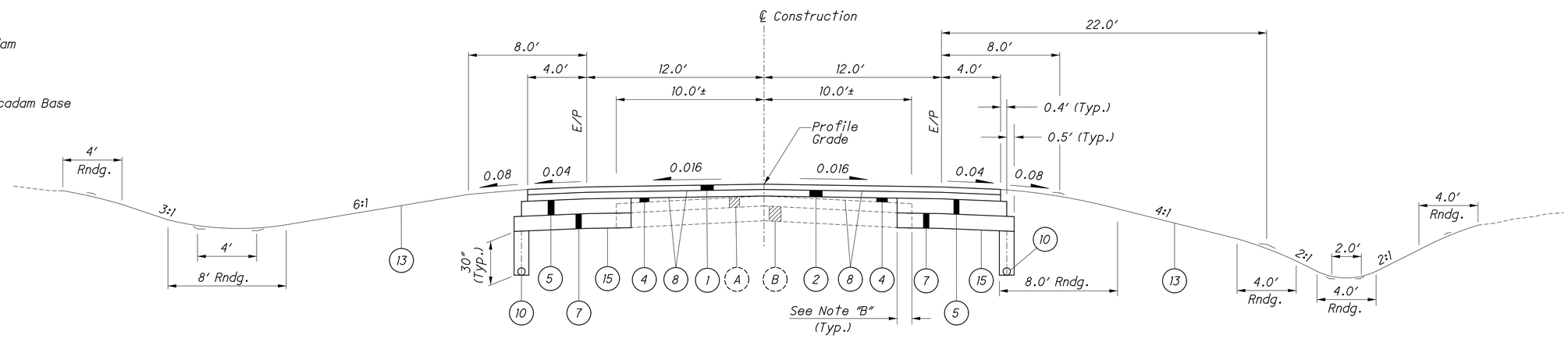

NORMAL SECTION - S.R. 106

STA. 621+35 TO STA. 640+50

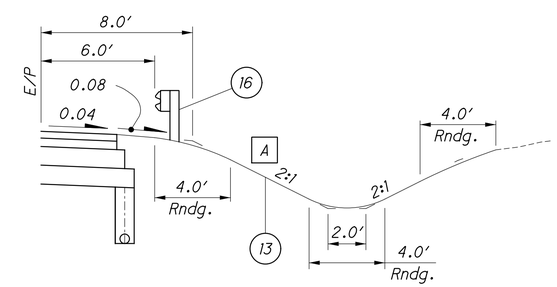

GUARDRAIL DETAIL - S.R. 106

SECTION APPLIES :
Sta. 635+50 to Sta. 637+75 Rt.

[A] Unless otherwise shown on the cross sections

NOTE "A"

Pavement planing shall be a constant depth of 1" at the ℄ of Construction with a uniform cross slope of 0.016 established. Maximum depth of planing at the outside edges of existing pavement has been calculated to be 2½".

NOTE "B"

For estimating purposes, Item 202 - Pavement Removed calculations included in the plan indicate an average width of 1 ft. of existing pavement being replaced.

NOTE "C"

Item 441, Asphalt Concrete Intermediate Course, Type 1, (448), is to be used as a leveling course to establish a 0.016 cross slope. Estimated quantities have been calculated based on exaggerated cross-sections shown on sheets 51-58.

NOTE "D"

Item 441, Asphalt Concrete Surface Course, Type 1, (448), PG64-22, is to be ¼" above gutter plate.

TYPICAL SECTIONS - U.S. 44 AND S.R. 106

GRE-44-9.00

pw:\\ohiodot-pw.bentley.com:ohiodot-pw-02\Documents\03 Standards\Sample Plans\v8i\SP1304\SP1304-2_2022-01.dgn Sheet 5/13/2022 10:13:24 AM tpetros